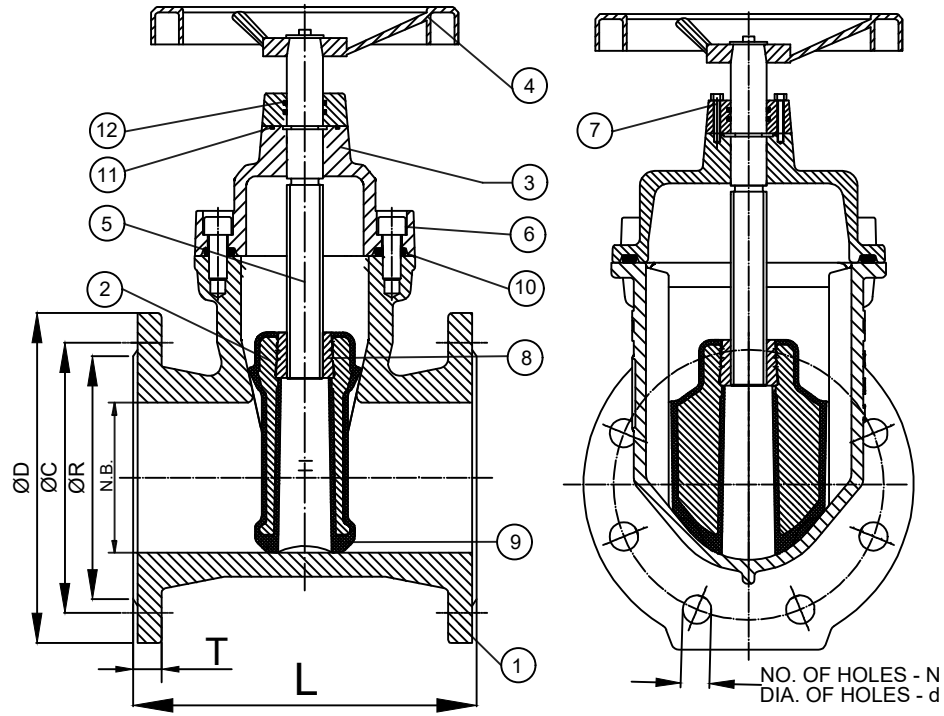

SIZE N.B.	FACE TO FACE	FLANGE O.D.	P.C.D	ØR	FLANGE THICK.	NO.OF. HOLES	DIA.OF. HOLES
MM	L	D	C		T	N	d
50	178	165	125	99	19	4	19
65	190	185	145	118	19	4	19
80	203	200	160	132	19	4	19
100	229	220	180	156	19	8	19
125	254	250	210	184	19	8	19
150	267	285	240	211	19	8	23
200	292	340	295	266	20	8	23
250	330	405	350	319	22	12	23
300	356	460	400	370	24.5	12	23
350	381	520	460	429	26.5	16	23
400	406	565	515	480	24.5	16	28
450	432	615	565	530	25.5	20	28
500	457	670	620	582	26.5	20	28
600	508	780	725	682	30	20	31

MATERIAL OF CONSTRUCTION

BILL OF MATERIALS

SL.NO.	DESCRIPTION	MATERIAL & SPECIFICATION
1	BODY	D.I. GGG50
2	WEDGE	D.I. GGG50
3	BONNET	D.I. GGG50
4	HANDWHEEL	D.I. GGG50
5	STEM	S.S. AISI-410
6	ALLEN BOLTS	S.S. AISI-304
7	ALLEN BOLTS	S.S. AISI-304
8	WEDGE NUT	BRASS IS:320, Gr. HT-2
9	SEAT	EPDM
10	BONNET GASKET	EPDM
11	HOUSING BUSH 'O' RING	EPDM
12	SEALING RING	EPDM

TECHNICAL SPECIFICATIONS

VALVE	RESILIENT SEATED GATE VALVE	RATING	P.N.- 10 / 16			
TYPE	NON-RISING SPINDLE	SERVICE	WATER			
MFG. STD.	BS : 5163	WORKING PRESSURE	10 / 16 Kg/Cm^2 MAX			
END. CONNECTION	BS : 4504, TABLE - 10 (PN-10)	END FACE	RAISED FACE			
FACE TO FACE	IS: 14846 ('PD' TYPE)	HYDRO TEST. PRESSURE (Kg/Cm^2)	PN RATING		HYDRO TEST. DURATION	
			PN - 10	PN - 16		
BASIC MATERIAL	DUCTILE IRON	BODY	15 Kg / Cm^2	24 Kg / Cm^2	BODY	5 MINUTE
TRIM MATERIAL	DI & EPDM	SEAT	10 Kg / Cm^2	16 Kg / Cm^2	SEAT	2 MINUTE

NOTES

NOTE:-

1. ALL DIMENSIONS ARE IN MM,UNLESS OTHERWISE SPECIFIED.
2. TOLERANCE SHALL BE CONFORMING AS PER RELEVANT SPECIFICATION.
3. TOLERANCE WHEREVER NOT SPECIFIED TO BE CONSIDERED ±2% OF SPECIFIED DIMENSION.
4. OPERATION : MANUALLY BY HAND WHEEL,CLOCKWISE CLOSING.
5. PAINTING : EPOXY POWDER COATING RAL 5005 BLUE SHADE DFT 200 -250 MICRON .
6. MATERIAL SHALL BE PROVIDED FOR INSPECTION IN PAINTED CONDITION.
7. MARKING(CAST/PLATE/PUNCHED):-UPADHAYA/SIZE/RATING/HEAT NO.

THIS DRAWING IS THE PROPERTY OF UPADHAYA VALVES MFRS. PVT. LTD. AND MUST NOT BE USED OR COPIED WITHOUT THEIR AUTHORITY IN WRITING.

UPADHAYA VALVES MFRS PVT LTD
23A, NETAJI SUBHAS ROAD, KOLKATA-700001.(INDIA)

	NAME	DATE
DRN	ANAND	01.04.24
CHD.		
APPD.		

SCALE :–N.T.S.

TITLE: D.I D/F RESILIENT SEATED GATE VALVE WITH HANDWHEEL OPERATED, AS PER BS:5163, PN -10/16

DRG.NO: U/RSGVAL-00

SHT 1 OF 1

REV.–00

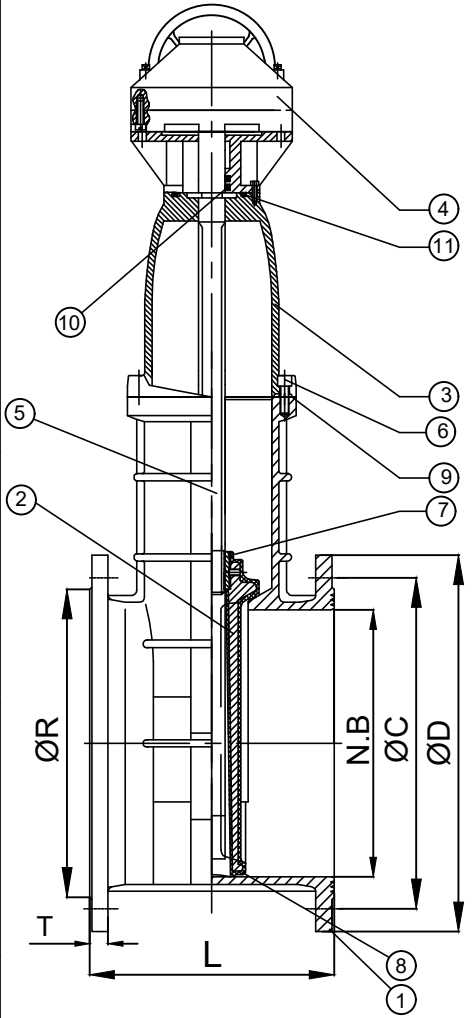

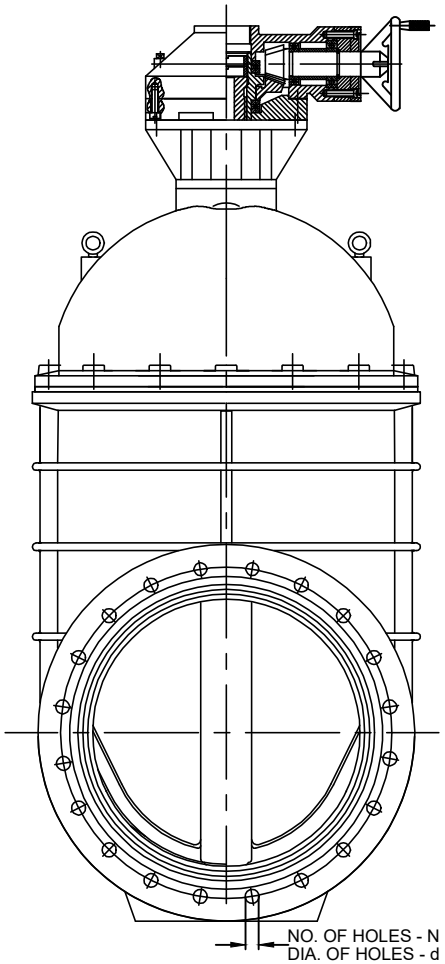

MATERIAL OF CONSTRUCTION

BILL OF MATERIALS

SL.NO	DESCRIPTION	MATERIAL & SPECIFICATION
1	BODY	D.I. GGG50
2	WEDGE	D.I. GGG50
3	BONNET	D.I. GGG50
4	BEVEL GEAR / SPUR GEAR	D.I. GGG50
5	STEM	S.S. AISI-420
6	NUT	S.S. AISI-304
7	WEDGE NUT	BRASS IS:320, Gr. HT-2
8	SEAT	EPDM
9	BONNET GASKET	EPDM
10	HOUSING BUSH 'O' RING	NBR
11	SEALING RING	NBR

TECHNICAL SPECIFICATIONS

VALVE	RESILIENT SEATED GATE VALVE	RATING	P.N.- 10 / 16			
TYPE	NON-RISING SPINDLE	SERVICE	WATER			
MFG. STD.	BS : 5163	WORKING PRESSURE	10 / 16 Kg/Cm^2 MAX			
END. CONNECTION	EN : 1092 - 2	END FACE	RAISED FACE			
FACE TO FACE	IS: 14846 ('PD' TYPE)	HYDRO TEST. PRESSURE (Kg/Cm^2)	PN RATING		HYDRO TEST. DURATION	
			PN - 10	PN - 16		
BASIC MATERIAL	DUCTILE IRON	BODY	15 Kg / Cm^2	24 Kg / Cm^2	BODY	5 MINUTE
TRIM MATERIAL	DI & EPDM	SEAT	10 Kg / Cm^2	16 Kg / Cm^2	SEAT	2 MINUTE

NOTES

NOTES:-

1. ALL DIMENSIONS ARE IN MM,UNLESS OTHERWISE SPECIFIED.
2. TOLERANCE WHEREVER NOT SPECIFIED TO BE CONSIDERED ±2% OF SPECIFIED DIMENSION.
3. OPERATION : MANUALLY BY GEAR OPERATED, CLOCKWISE CLOSING.
4. TOLERANCE SHALL BE CONFORMING AS PER RELEVANT SPECIFICATION.
5. FLANGE THICKNESS AS PER IS:9523, TABLE- 4.
6. PAINTING : EPOXY POWDER COATING RAL 5005 BLUE SHADE DFT 200 -250 MICRON .
7. MATERIAL SHALL BE PROVIDED FOR INSPECTION IN PAINTED CONDITION.
8. MARKING(CAST/PLATE/PUNCHED):-UPADHAYA/SIZE/RATING/HEAT NO.

SIZE N.B.	FACE TO FACE	FLANGE O.D.	P.C.D	ØR	FLANGE THICK.	NO.OF. HOLES	DIA.OF. HOLES
MM	L	D	C		T	N	d
700	610	895	840	794	32.5	24	31
750	610	960	900	854	32.5	24	31
800	660	1015	950	901	35	24	34
900	711	1115	1050	1001	37.5	28	34
1000	811	1230	1160	1112	40	28	37
1100	811	1340	1270	1218	42	32	37
1200	1015	1455	1380	1328	45	32	40

NOTICE
THIS DRAWING IS THE PROPERTY OF UPADHAYA VALVES MFRS. PVT. LTD. AND MUST NOT BE USED OR COPIED WITHOUT THEIR AUTHORITY IN WRITING.

UPADHAYA VALVES MFRS PVT LTD
23A, NETAJI SUBHAS ROAD, KOLKATA-700001.(INDIA)

	NAME	DATE
DRN	ANAND	01.04.24
CHD.		
APPD.		

SCALE :–N.T.S.

TITLE:D.I D/F RESILIENT SEATED GATE VALVE FITTED WITH MANUALLY GEAR OPERATED, AS PER BS:5163, PN -10 / 16

DRG.NO: U/RSGVAL-MG-00

SHT 1 OF 1

REV.-00