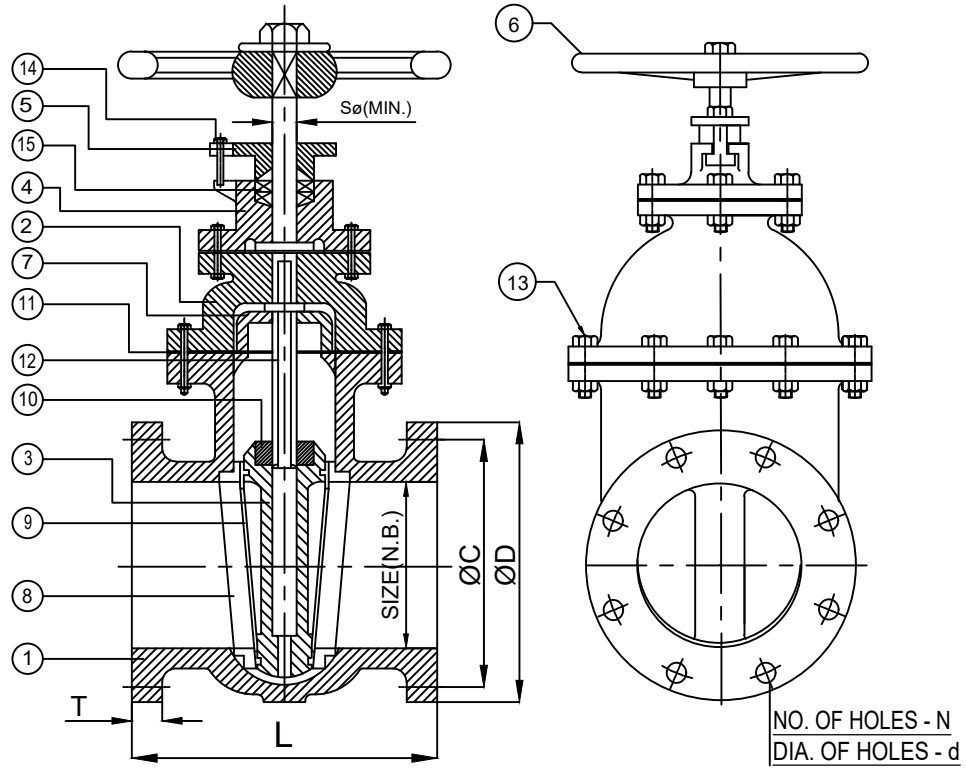

SIZE(N.B.)	FACE TO FACE (L)			STEM DIA.	FLANGE O.D.	P.C.D	FLANGE THICK.	NO.OF. HOLES	DIA.OF. HOLES
MM	" PD "	ALT -I	ALT -II	S	D	C	T	N	d
50	178 ±2	250 ±2	215 ±2	22	165	125	16	4	19
65	190 ±2	270 ±2	230 ±2	22	185	145	16	4	19
80	203 ±2	280 ±2	230 ±2	22	200	160	21	4	19
100	229 ±2	300 ±2	255 ±2	27	220	180	22	8	19
125	254 ±2	325 ±2	266 ±2	27	250	210	22.5	8	19
150	267 ±2	350 ±2	280 ±2	27	285	240	23	8	23
200	292 ±2	400 ±2	318 ±2	32	340	295	24.5	8	23
250	330 ±2	450 ±2	355 ±2	36	395	350	26	12	23
300	356 ±2	500 ±2	380 ±2	36	445	400	27.5	12	23
350	381 ±3	550 ±3	--	37	505	460	29	16	28
400	406 ±3	600 ±3	--	42	565	513	30	16	28
450	432 ±3	650 ±3	--	47	615	565	31.5	20	28
500	457 ±3	700 ±3	--	47	670	620	33	20	28
600	508 ±3	800 ±3	--	47	780	725	36	20	31
700	610 ±4	900 ±4	1130 ±4	62	895	840	38.5	24	31
750	610 ±4	950 ±4	1200 ±4	67	960	900	40	24	31
800	660 ±4	1000 ±4	1250 ±4	67	1015	950	41.5	24	34
900	711 ±5	1100 ±5	1380 ±5	77	1115	1050	44	28	34
1000	811 ±5	1200 ±5	1500 ±2	77	1230	1160	47	28	37
1100	1650 ±6	--	--	87	1340	1270	50	32	37
1200	1800 ±6	--	--	87	1455	1380	53	32	40

MATERIAL OF CONSTRUCTION

BILL OF MATERIALS

SL.NO.	DESCRIPTION	NO.OFF	MATERIAL & SPECIFICATION
1	BODY	1	C.I. IS:210 GR.FG.200 / 220 / 260
2	BONNET	1	C.I. IS:210 GR.FG.200 / 220 / 260
3	WEDGE	1	C.I. IS:210 GR.FG.200 / 220 / 260
4	STUFFING BOX	1	C.I. IS:210 GR.FG.200 / 220 / 260
5	GLAND	1	C.I. IS:210 GR.FG.200 / 220 / 260
6	HANDWHEEL	1	C.I. IS:210 GR.FG.200 / 220 / 260
7	THRUST PLATE	1	C.I. IS:210 GR.FG.200 / 220 / 260
8	BODY SEAT RING	2	L.T. BRONZE, IS:318, Gr. LTB - 2
9	WEDGE FACING RING	2	L.T. BRONZE, IS:318, Gr. LTB - 2
10	WEDGE NUT	1	L.T. BRONZE, IS:318, Gr. LTB - 2
11	GASKET	- -	RUBBER IS:638, TYPE- B
12	STEM	1	S.S. AISI - 410
13	BONNET BOLTS/STUDS,NUTS	AS REQD	CARBON STEEL,IS:1363,CL 4.6/4.0 (IS:1367)
14	GLAND BOLTS/STUDS,NUTS		
15	GLAND PACKING	AS REQD	JUTE & HEMP IS : 5414

TECHNICAL SPECIFICATION

VALVE	SLUICE VALVE	RATING	P.N.- 1.0		
TYPE	NON-RISING SPINDLE	SERVICE	WATER		
MFG. STD.	IS : 14846, PD TYPE.	WORKING PRESSURE	10 KG/Cm^2 MAX		
END. CONNECTION	IS : 1538, TABLE - 4 & 6	WORKING TEMP.	AMBIENT.		
END FACE	FLAT FACE	HYDRO TEST. PRESSURE (Kg/Cm^2)		HYDRO TEST.DURATION	
BASIC MATERIAL	CAST IRON	BODY	15 Kg / Cm^2	BODY	5 MINUTE
TRIM MATERIAL	L.T. BRONZE	SEAT	10 Kg / Cm^2	SEAT	2 MINUTE

NOTES

NOTES:-

1. ALL DIMENSIONS ARE IN MM,UNLESS OTHERWISE SPECIFIED.
2. TOLERANCE WHEREVER NOT SPECIFIED TO BE CONSIDERED ±2% OF SPECIFIED DIMENSION.
3. OPERATION : MANUALLY BY HANDWHEEL,CLOCKWISE CLOSING.
4. TOLERANCE SHALL BE CONFORMING AS PER RELEVANT SPECIFICATION.
5. THRUST PLATE APPLICABLE UPTO 150 N.B.
6. PAINTING : AS PER RELEVANT SPECIFICATION/ CLIENT REQUIREMENT.
7. MARKING(CAST/PLATE/PUNCHED):-UPADHAYA/SIZE/RATING/HEAT NO.

NOTICE: THIS DRAWING IS THE PROPERTY OF UPADHAYA VALVES MFRS. PVT. LTD. AND MUST NOT BE USED OR COPIED WITHOUT THEIR AUTHORITY IN WRITING.

UPADHAYA VALVES MFRS PVT LTD
23A, NETAJI SUBHAS ROAD, KOLKATA-700001.(INDIA)

	NAME	DATE
DRN	ANAND	01.04.24
CHD.		
APPD.		

SCALE :–N.T.S.

TITLE: C.I. D/F NON-RISING SPINDLE SLUICE VALVE MANUALLY HANDWHEEL OPERATED,AS PER IS:14846/2000,P.N-1.0

DRG.NO:U/GVAL- 00

SHT 1 OF 1

REV.-00

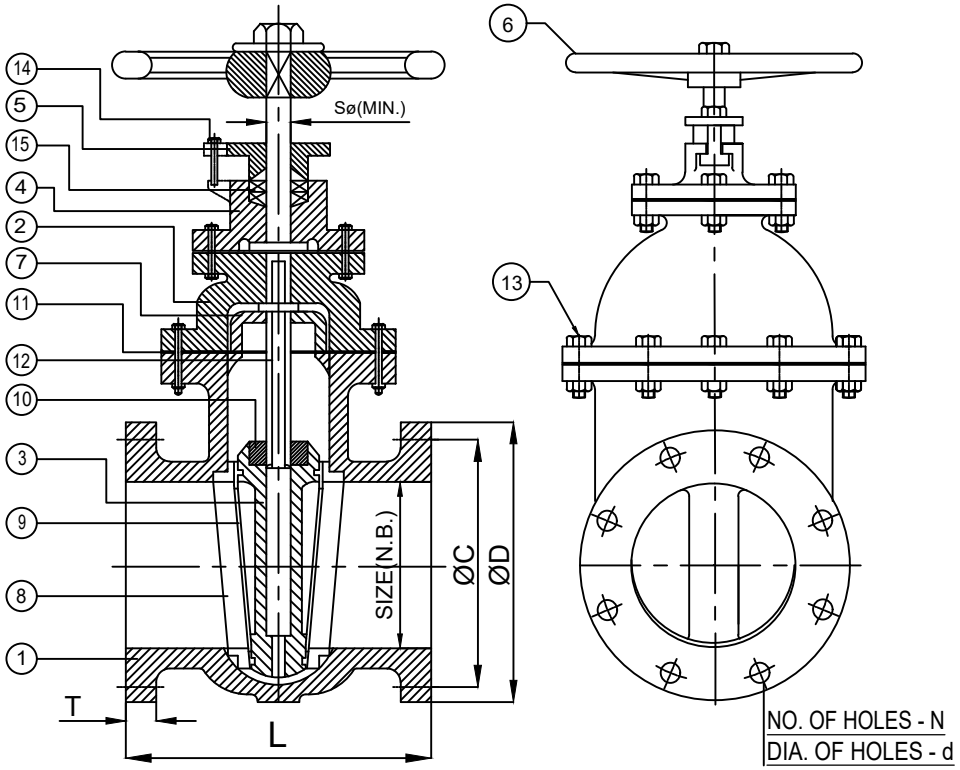

SIZE(N.B.)	FACE TO FACE (L)			STEM DIA.	FLANGE O.D.	P.C.D	FLANGE THICK.	NO.OF. HOLES	DIA.OF. HOLES
MM	" PD "	ALT -I	ALT -II	S	D	C	T	N	d
50	178 ±2	250 ±2	215 ±2	22	165	125	16	4	19
65	190 ±2	270 ±2	230 ±2	22	185	145	16	4	19
80	203 ±2	280 ±2	230 ±2	22	200	160	21	4	19
100	229 ±2	300 ±2	255 ±2	27	220	180	22	8	19
125	254 ±2	325 ±2	266 ±2	27	250	210	22.5	8	19
150	267 ±2	350 ±2	280 ±2	27	285	240	23	8	23
200	292 ±2	400 ±2	318 ±2	32	340	295	24.5	8	23
250	330 ±2	450 ±2	355 ±2	36	395	350	26	12	23
300	356 ±2	500 ±2	380 ±2	36	445	400	27.5	12	23
350	381 ±3	550 ±3	--	37	505	460	29	16	28
400	406 ±3	600 ±3	--	42	565	513	30	16	28
450	432 ±3	650 ±3	--	47	615	565	31.5	20	28
500	457 ±3	700 ±3	--	47	670	620	33	20	28
600	508 ±3	800 ±3	--	47	780	725	36	20	31
700	610 ±4	900 ±4	1130 ±4	62	895	840	38.5	24	31
750	610 ±4	950 ±4	1200 ±4	67	960	900	40	24	31
800	660 ±4	1000 ±4	1250 ±4	67	1015	950	41.5	24	34
900	711 ±5	1100 ±5	1380 ±5	77	1115	1050	44	28	34
1000	811 ±5	1200 ±5	1500 ±2	77	1230	1160	47	28	37
1100	1650 ±6	--	--	87	1340	1270	50	32	37
1200	1800 ±6	--	--	87	1455	1380	53	32	40

MATERIAL OF CONSTRUCTION

BILL OF MATERIALS

SL.NO.	DESCRIPTION	NO.OFF	MATERIAL & SPECIFICATION
1	BODY	1	D.I IS:1865 GR.500/7
2	BONNET	1	D.I IS:1865 GR.500/7
3	WEDGE	1	D.I IS:1865 GR.500/7
4	STUFFING BOX	1	D.I IS:1865 GR.500/7
5	GLAND	1	D.I IS:1865 GR.500/7
6	HANDWHEEL	1	D.I IS:1865 GR.500/7
7	THRUST PLATE	1	D.I IS:1865 GR.500/7
8	BODY SEAT RING	2	L.T. BRONZE, IS:318, Gr. LTB - 2
9	WEDGE FACING RING	2	L.T. BRONZE, IS:318, Gr. LTB - 2
10	WEDGE NUT	1	L.T. BRONZE, IS:318, Gr. LTB - 2
11	GASKET	- -	RUBBER IS:638, TYPE- B
12	STEM	1	S.S. AISI - 410
13	BONNET BOLTS/STUDS,NUTS	AS REQD	CARBON STEEL,IS:1363,CL 4.6/4.0 (IS:1367)
14	GLAND BOLTS/STUDS,NUTS		
15	GLAND PACKING	AS REQD	JUTE & HEMP IS : 5414

TECHNICAL SPECIFICATION

VALVE	SLUICE VALVE	RATING	P.N.- 1.0		
TYPE	NON-RISING SPINDLE	SERVICE	WATER		
MFG. STD.	IS : 14846, PD TYPE.	WORKING PRESSURE	10 KG/Cm^2 MAX		
END. CONNECTION	IS : 1538, TABLE - 4 & 6	WORKING TEMP.	AMBIENT.		
END FACE	FLAT FACE	HYDRO TEST. PRESSURE (Kg/Cm^2)		HYDRO TEST.DURATION	
BASIC MATERIAL	DUCTILE IRON	BODY	15 Kg / Cm^2	BODY	5 MINUTE
TRIM MATERIAL	L.T. BRONZE	SEAT	10 Kg / Cm^2	SEAT	2 MINUTE

NOTES

NOTES:-

1. ALL DIMENSIONS ARE IN MM,UNLESS OTHERWISE SPECIFIED.
2. TOLERANCE WHEREVER NOT SPECIFIED TO BE CONSIDERED ±2% OF SPECIFIED DIMENSION.
3. OPERATION : MANUALLY BY HANDWHEEL,CLOCKWISE CLOSING.
4. TOLERANCE SHALL BE CONFORMING AS PER RELEVANT SPECIFICATION.
5. THRUST PLATE APPLICABLE UPTO 150 N.B.
6. PAINTING : AS PER RELEVANT SPECIFICATION/ CLIENT REQUIREMENT.
7. MARKING(CAST/PLATE/PUNCHED):-UPADHAYA/SIZE/RATING/HEAT NO.

NOTICE THIS DRAWING IS THE PROPERTY OF UPADHAYA VALVES MFRS. PVT. LTD. AND MUST NOT BE USED OR COPIED WITHOUT THEIR AUTHORITY IN WRITING.

UPADHAYA VALVES MFRS PVT LTD
23A, NETAJI SUBHAS ROAD, KOLKATA-700001.(INDIA)

	NAME	DATE
DRN	ANAND	01.04.24
CHD.		
APPD.		

SCALE :–N.T.S.

TITLE: D.I. D/F NON-RISING SPINDLE SLUICE VALVE MANUALLY HANDWHEEL OPERATED,AS PER IS:14846/2000,P.N-1.0

DRG.NO:U/GVAL- 00

SHT 1 OF 1

REV.-00

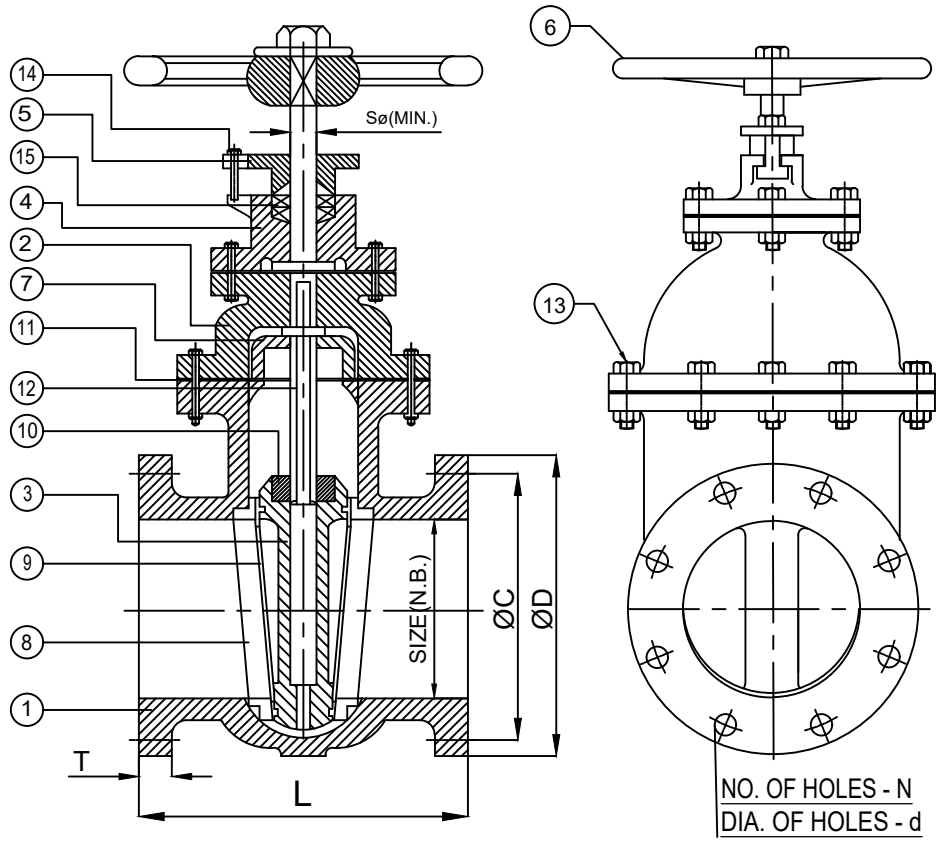

MATERIAL OF CONSTRUCTION

BILL OF MATERIALS

SL.NO.	DESCRIPTION	NO.OFF	MATERIAL & SPECIFICATION
1	BODY	1	C.I. IS:210 GR.FG.200 / 220 / 260
2	BONNET	1	C.I. IS:210 GR.FG.200 / 220 / 260
3	WEDGE	1	C.I. IS:210 GR.FG.200 / 220 / 260
4	STUFFING BOX	1	C.I. IS:210 GR.FG.200 / 220 / 260
5	GLAND	1	C.I. IS:210 GR.FG.200 / 220 / 260
6	HANDWHEEL	1	C.I. IS:210 GR.FG.200 / 220 / 260
7	THRUST PLATE	1	C.I. IS:210 GR.FG.200 / 220 / 260
8	BODY SEAT RING	2	L.T. BRONZE, IS:318, Gr. LTB - 2
9	WEDGE FACING RING	2	L.T. BRONZE, IS:318, Gr. LTB - 2
10	WEDGE NUT	1	L.T. BRONZE, IS:318, Gr. LTB - 2
11	GASKET	- -	RUBBER IS:638, TYPE- B
12	STEM	1	S.S. AISI - 410
13	BONNET BOLTS/STUDS,NUTS	AS REQD	CARBON STEEL,IS:1363,CL 4.6/4.0 (IS:1367)
14	GLAND BOLTS/STUDS,NUTS		
15	GLAND PACKING	AS REQD	JUTE & HEMP IS : 5414

TECHNICAL SPECIFICATION

VALVE	SLUICE VALVE	RATING	P.N.- 1.6		
TYPE	NON-RISING SPINDLE	SERVICE	WATER		
MFG. STD.	IS : 14846, PD TYPE.	WORKING PRESSURE	16 KG/Cm^2 MAX		
END. CONNECTION	IS : 1538, TABLE - 4 & 6	WORKING TEMP.	AMBIENT.		
END FACE	FLAT FACE	HYDRO TEST. PRESSURE (Kg/Cm^2)		HYDRO TEST.DURATION	
BASIC MATERIAL	CAST IRON	BODY	24 Kg / Cm^2	BODY	5 MINUTE
TRIM MATERIAL	L.T. BRONZE	SEAT	16 Kg / Cm^2	SEAT	2 MINUTE

NOTES

NOTES:-

1. ALL DIMENSIONS ARE IN MM,UNLESS OTHERWISE SPECIFIED.
2. TOLERANCE WHEREVER NOT SPECIFIED TO BE CONSIDERED ±2% OF SPECIFIED DIMENSION.
3. OPERATION : MANUALLY BY HANDWHEEL,CLOCKWISE CLOSING.
4. TOLERANCE SHALL BE CONFORMING AS PER RELEVANT SPECIFICATION.
5. THRUST PLATE APPLICABLE UPTO 150 N.B.
6. PAINTING : AS PER RELEVANT SPECIFICATION/ CLIENT REQUIREMENT.
7. MARKING(CAST/PLATE/PUNCHED):-UPADHAYA/SIZE/RATING/HEAT NO.

SIZE(N.B.)	FACE TO FACE (L)			STEM DIA.	FLANGE O.D.	P.C.D	FLANGE THICK.	NO.OF. HOLES	DIA.OF. HOLES
MM	" PD "	ALT -I	ALT -II	S	D	C	T	N	d
50	178 ±2	250 ±2	215 ±2	22	165	125	16	4	19
65	190 ±2	270 ±2	230 ±2	22	185	145	16	4	19
80	203 ±2	280 ±2	230 ±2	22	200	160	21	4	19
100	229 ±2	300 ±2	255 ±2	27	220	180	22	8	19
125	254 ±2	325 ±2	266 ±2	27	250	210	22.5	8	19
150	267 ±2	350 ±2	280 ±2	27	285	240	23	8	23
200	292 ±2	400 ±2	318 ±2	32	340	295	24.5	8	23
250	330 ±2	450 ±2	355 ±2	36	395	350	26	12	23
300	356 ±2	500 ±2	380 ±2	36	445	400	27.5	12	23
350	381 ±3	550 ±3	690 ±3	42	505	460	29	16	28
400	406 ±3	600 ±3	750 ±3	47	565	513	30	16	28
450	432 ±3	650 ±3	820 ±3	52	615	565	31.5	20	28
500	457 ±3	700 ±3	880 ±3	52	670	620	33	20	28
600	508 ±3	800 ±3	1000 ±3	57	780	725	36	20	31

NOTICE: THIS DRAWING IS THE PROPERTY OF UPADHAYA VALVES MFRS. PVT. LTD. AND MUST NOT BE USED OR COPIED WITHOUT THEIR AUTHORITY IN WRITING.

UPADHAYA VALVES MFRS PVT LTD
23A, NETAJI SUBHAS ROAD, KOLKATA-700001.(INDIA)

	NAME	DATE
DRN	ANAND	01.04.24
CHD.		
APPD.		

SCALE :–N.T.S.

TITLE: C.I. D/F NON-RISING SPINDLE SLUICE VALVE MANUALLY HANDWHEEL OPERATED,AS PER IS:14846/2000,P.N-1.6

DRG.NO:U/GVAL- 00

SHT 1 OF 1

REV.-00

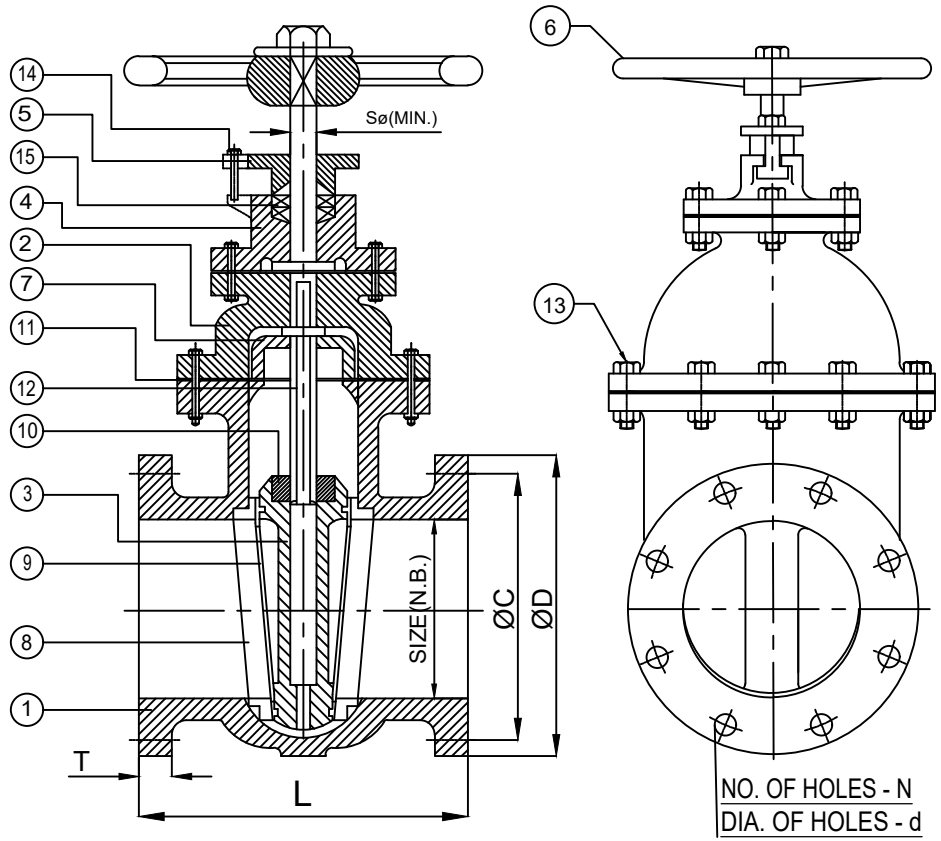

MATERIAL OF CONSTRUCTION

BILL OF MATERIALS

SL.NO.	DESCRIPTION	NO.OFF	MATERIAL & SPECIFICATION
1	BODY	1	D.I IS:1865 GR.500/7
2	BONNET	1	D.I IS:1865 GR.500/7
3	WEDGE	1	D.I IS:1865 GR.500/7
4	STUFFING BOX	1	D.I IS:1865 GR.500/7
5	GLAND	1	D.I IS:1865 GR.500/7
6	HANDWHEEL	1	D.I IS:1865 GR.500/7
7	THRUST PLATE	1	D.I IS:1865 GR.500/7
8	BODY SEAT RING	2	L.T. BRONZE, IS:318, Gr. LTB - 2
9	WEDGE FACING RING	2	L.T. BRONZE, IS:318, Gr. LTB - 2
10	WEDGE NUT	1	L.T. BRONZE, IS:318, Gr. LTB - 2
11	GASKET	- -	RUBBER IS:638, TYPE- B
12	STEM	1	S.S. AISI - 410
13	BONNET BOLTS/STUDS,NUTS	AS REQD	CARBON STEEL,IS:1363,CL 4.6/4.0 (IS:1367)
14	GLAND BOLTS/STUDS,NUTS		
15	GLAND PACKING	AS REQD	JUTE & HEMP IS : 5414

TECHNICAL SPECIFICATION

VALVE	SLUICE VALVE	RATING	P.N.- 1.6		
TYPE	NON-RISING SPINDLE	SERVICE	WATER		
MFG. STD.	IS : 14846, PD TYPE.	WORKING PRESSURE	16 KG/Cm^2 MAX		
END. CONNECTION	IS : 1538, TABLE - 4 & 6	WORKING TEMP.	AMBIENT.		
END FACE	FLAT FACE	HYDRO TEST. PRESSURE (Kg/Cm^2)		HYDRO TEST.DURATION	
BASIC MATERIAL	DUCTILE IRON	BODY	24 Kg / Cm^2	BODY	5 MINUTE
TRIM MATERIAL	L.T. BRONZE	SEAT	16 Kg / Cm^2	SEAT	2 MINUTE

NOTES

NOTES:-

1. ALL DIMENSIONS ARE IN MM,UNLESS OTHERWISE SPECIFIED.
2. TOLERANCE WHEREVER NOT SPECIFIED TO BE CONSIDERED ±2% OF SPECIFIED DIMENSION.
3. OPERATION : MANUALLY BY HANDWHEEL,CLOCKWISE CLOSING.
4. TOLERANCE SHALL BE CONFORMING AS PER RELEVANT SPECIFICATION.
5. THRUST PLATE APPLICABLE UPTO 150 N.B.
6. PAINTING : AS PER RELEVANT SPECIFICATION/ CLIENT REQUIREMENT.
7. MARKING(CAST/PLATE/PUNCHED):-UPADHAYA/SIZE/RATING/HEAT NO.

SIZE(N.B.)	FACE TO FACE (L)			STEM DIA.	FLANGE O.D.	P.C.D	FLANGE THICK.	NO.OF. HOLES	DIA.OF. HOLES
MM	" PD "	ALT -I	ALT -II	S	D	C	T	N	d
50	178 ±2	250 ±2	215 ±2	22	165	125	16	4	19
65	190 ±2	270 ±2	230 ±2	22	185	145	16	4	19
80	203 ±2	280 ±2	230 ±2	22	200	160	21	4	19
100	229 ±2	300 ±2	255 ±2	27	220	180	22	8	19
125	254 ±2	325 ±2	266 ±2	27	250	210	22.5	8	19
150	267 ±2	350 ±2	280 ±2	27	285	240	23	8	23
200	292 ±2	400 ±2	318 ±2	32	340	295	24.5	8	23
250	330 ±2	450 ±2	355 ±2	36	395	350	26	12	23
300	356 ±2	500 ±2	380 ±2	36	445	400	27.5	12	23
350	381 ±3	550 ±3	690 ±3	42	505	460	29	16	28
400	406 ±3	600 ±3	750 ±3	47	565	513	30	16	28
450	432 ±3	650 ±3	820 ±3	52	615	565	31.5	20	28
500	457 ±3	700 ±3	880 ±3	52	670	620	33	20	28
600	508 ±3	800 ±3	1000 ±3	57	780	725	36	20	31

NOTICE: THIS DRAWING IS THE PROPERTY OF UPADHAYA VALVES MFRS. PVT. LTD. AND MUST NOT BE USED OR COPIED WITHOUT THEIR AUTHORITY IN WRITING.

UPADHAYA VALVES MFRS PVT LTD
23A, NETAJI SUBHAS ROAD, KOLKATA-700001.(INDIA)

	NAME	DATE
DRN	ANAND	01.04.24
CHD.		
APPD.		

SCALE :–N.T.S.

TITLE: D.I. D/F NON-RISING SPINDLE SLUICE VALVE MANUALLY HANDWHEEL OPERATED,AS PER IS:14846/2000,P.N-1.6

DRG.NO:U/GVAL- 00

SHT 1 OF 1

REV.-00

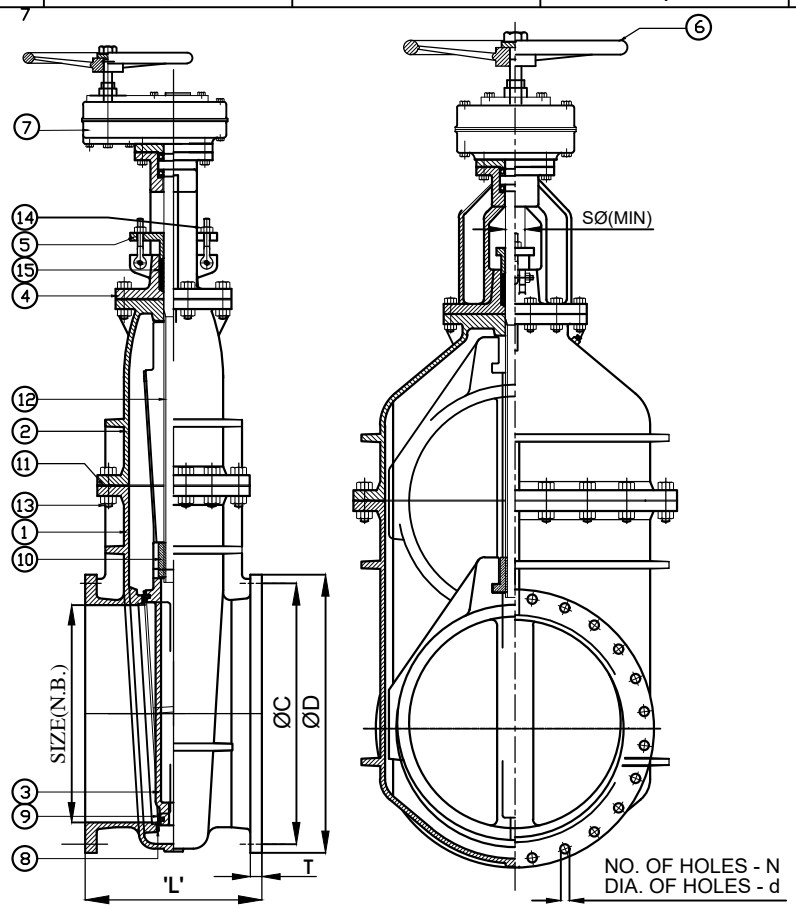

SIZE (N.B.)	FACE TO FACE (L)			STEM DIA.	FLANGE O.D.	P.C.D	FLANGE THICK.	NO.OF. HOLES	DIA.OF. HOLES
MM	" PD "	ALT -I	ALT -II	S	D	C	T	N	d
350	381 ±3	550 ±3	--	37	505	460	29	16	28
400	406 ±3	600 ±3	--	42	565	513	30	16	28
450	432 ±3	650 ±3	--	47	615	565	31.5	20	28
500	457 ±3	700 ±3	--	47	670	620	33	20	28
600	508 ±3	800 ±3	--	47	780	725	36	20	31
700	610 ±4	900 ±4	1130 ±4	62	895	840	38.5	24	31
750	610 ±4	950 ±4	1200 ±4	67	960	900	40	24	31
800	660 ±4	1000 ±4	1250 ±4	67	1015	950	41.5	24	34
900	711 ±5	1100 ±5	1380 ±5	77	1115	1050	44	28	34
1000	811 ±5	1200 ±5	1500 ±2	77	1230	1160	47	28	37
1100	1650 ±6	--	--	87	1340	1270	50	32	37
1200	1800 ±6	--	--	87	1455	1380	53	32	40

MATERIAL OF CONSTRUCTION

BILL OF MATERIALS

SL.NO.	DESCRIPTION	NO.OFF	MATERIAL & SPECIFICATION
1	BODY	1	C.I. IS:210 GR.FG.200 / 220 / 260
2	BONNET	1	C.I. IS:210 GR.FG.200 / 220 / 260
3	WEDGE	1	C.I. IS:210 GR.FG.200 / 220 / 260
4	STUFFING BOX	1	C.I. IS:210 GR.FG.200 / 220 / 260
5	GLAND	1	C.I. IS:210 GR.FG.200 / 220 / 260
6	HANDWHEEL	1	C.I. IS:210 GR.FG.200 / 220 / 260
7	SPUR GEAR	1	S.G. IRON IS:1865 GR.500/7 / WROUGHT C.S. IS:1570 C55Mn75
8	BODY SEAT RING	2	L.T. BRONZE, IS:318, Gr. LTB - 2
9	WEDGE FACING RING	2	L.T. BRONZE, IS:318, Gr. LTB - 2
10	WEDGE NUT	1	L.T. BRONZE, IS:318, Gr. LTB - 2
11	BONNET GASKET	- -	RUBBER IS:638, TYPE- B
12	STEM	1	S.S. (IS:6603 Gr.12 Cr.12) / S.S. AISI - 410
13	BONNET BOLTS/STUDS,NUTS	AS REQD	CARBON STEEL,IS:1363,CL 4.6/4.0 (IS:1367)
14	GLAND BOLTS/STUDS,NUTS		
15	GLAND PACKING	AS REQD	JUTE & HEMP IS : 5414

TECHNICAL SPECIFICATION

VALVE	SLUICE VALVE	RATING	P.N.- 1.0		
TYPE	NON-RISING SPINDLE	SERVICE	WATER		
MFG. STD.	IS : 14846, PD TYPE.	WORKING PRESSURE	10 KG/Cm^2 MAX		
END. CONNECTION	IS : 1538, TABLE - 4 & 6	WORKING TEMP.	AMBIENT.		
END FACE	FLAT FACE	HYDRO TEST. PRESSURE (Kg/Cm^2)		HYDRO TEST.DURATION	
BASIC MATERIAL	CAST IRON	BODY	15 Kg / Cm^2	BODY	5 MINUTE
TRIM MATERIAL	L.T. BRONZE	SEAT	10 Kg / Cm^2	SEAT	2 MINUTE

NOTES

NOTES:-

1. ALL DIMENSIONS ARE IN MM,UNLESS OTHERWISE SPECIFIED.
2. TOLERANCE WHEREVER NOT SPECIFIED TO BE CONSIDERED ±2% OF SPECIFIED DIMENSION.
3. OPERATION : MANUALLY BY GEAR WITH HANDWHEEL,CLOCKWISE CLOSING.
4. FLANGE DRILLING STD. AS PER IS: 1538 / ANSI B 16.5 CL- 150 /EN 1092-2 / AS PER CLIENT REQUIREMENTS.
4. TOLERANCE SHALL BE CONFORMING AS PER RELEVANT SPECIFICATION.
5. AS PER RELEVANT SPECIFICATION/ CLIENT REQUIREMENT.
6. MARKING(CAST/PLATE/PUNCHED):-UPADHAYA/SIZE/RATING/HEAT NO.

NOTICE: THIS DRAWING IS THE PROPERTY OF UPADHAYA VALVES MFRS. PVT. LTD. AND MUST NOT BE USED OR COPIED WITHOUT THEIR AUTHORITY IN WRITING.

UPADHAYA VALVES MFRS PVT LTD
23A, NETAJI SUBHAS ROAD, KOLKATA-700001.(INDIA)

	NAME	DATE
DRN	ANAND	01.04.24
CHD.		
APPD.		

SCALE :–N.T.S.

TITLE: C.I. D/F NON-RISING SPINDLE SLUICE VALVE MANUALLY SPUR GEAR OPERATED,AS PER IS:14846/2000,P.N-1.0

DRG.NO:U/GVAL-MG- 00

SHT 1 OF 1

REV.-00

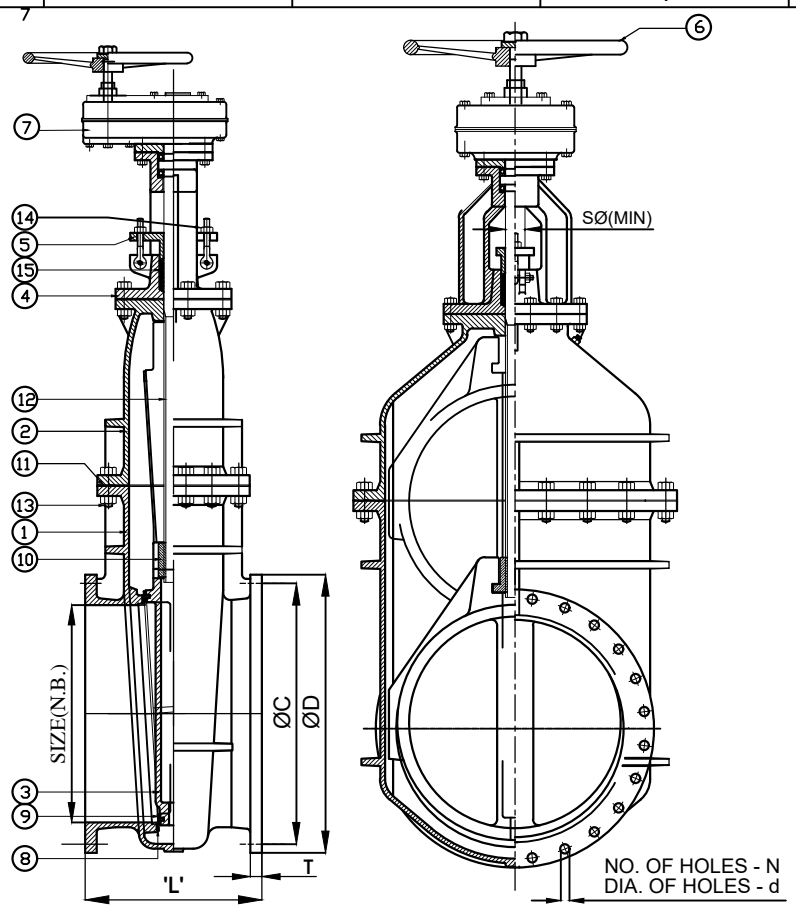

SIZE (N.B.)	FACE TO FACE (L)			STEM DIA.	FLANGE O.D.	P.C.D	FLANGE THICK.	NO.OF. HOLES	DIA.OF. HOLES
MM	" PD "	ALT -I	ALT -II	S	D	C	T	N	d
350	381 ±3	550 ±3	--	37	505	460	29	16	28
400	406 ±3	600 ±3	--	42	565	513	30	16	28
450	432 ±3	650 ±3	--	47	615	565	31.5	20	28
500	457 ±3	700 ±3	--	47	670	620	33	20	28
600	508 ±3	800 ±3	--	47	780	725	36	20	31
700	610 ±4	900 ±4	1130 ±4	62	895	840	38.5	24	31
750	610 ±4	950 ±4	1200 ±4	67	960	900	40	24	31
800	660 ±4	1000 ±4	1250 ±4	67	1015	950	41.5	24	34
900	711 ±5	1100 ±5	1380 ±5	77	1115	1050	44	28	34
1000	811 ±5	1200 ±5	1500 ±2	77	1230	1160	47	28	37
1100	1650 ±6	--	--	87	1340	1270	50	32	37
1200	1800 ±6	--	--	87	1455	1380	53	32	40

MATERIAL OF CONSTRUCTION

BILL OF MATERIALS

SL.NO.	DESCRIPTION	NO.OFF	MATERIAL & SPECIFICATION
1	BODY	1	D.I IS:1865 GR.500/7
2	BONNET	1	D.I IS:1865 GR.500/7
3	WEDGE	1	D.I IS:1865 GR.500/7
4	STUFFING BOX	1	D.I IS:1865 GR.500/7
5	GLAND	1	D.I IS:1865 GR.500/7
6	HANDWHEEL	1	D.I IS:1865 GR.500/7
7	SPUR GEAR	1	S.G. IRON IS:1865 GR.500/7 / WROUGHT C.S. IS:1570 C55Mn75
8	BODY SEAT RING	2	L.T. BRONZE, IS:318, Gr. LTB - 2
9	WEDGE FACING RING	2	L.T. BRONZE, IS:318, Gr. LTB - 2
10	WEDGE NUT	1	L.T. BRONZE, IS:318, Gr. LTB - 2
11	BONNET GASKET	- -	RUBBER IS:638, TYPE- B
12	STEM	1	S.S. (IS:6603 Gr.12 Cr.12) / S.S. AISI - 410
13	BONNET BOLTS/STUDS,NUTS	AS REQD	CARBON STEEL,IS:1363,CL 4.6/4.0 (IS:1367)
14	GLAND BOLTS/STUDS,NUTS		
15	GLAND PACKING	AS REQD	JUTE & HEMP IS : 5414

TECHNICAL SPECIFICATION

VALVE	SLUICE VALVE	RATING	P.N.- 1.0		
TYPE	NON-RISING SPINDLE	SERVICE	WATER		
MFG. STD.	IS : 14846, PD TYPE.	WORKING PRESSURE	10 KG/Cm^2 MAX		
END. CONNECTION	IS : 1538, TABLE - 4 & 6	WORKING TEMP.	AMBIENT.		
END FACE	FLAT FACE	HYDRO TEST. PRESSURE (Kg/Cm^2)		HYDRO TEST.DURATION	
BASIC MATERIAL	DUCTILE IRON	BODY	15 Kg / Cm^2	BODY	5 MINUTE
TRIM MATERIAL	L.T. BRONZE	SEAT	10 Kg / Cm^2	SEAT	2 MINUTE

NOTES

NOTES:-

1. ALL DIMENSIONS ARE IN MM,UNLESS OTHERWISE SPECIFIED.
2. TOLERANCE WHEREVER NOT SPECIFIED TO BE CONSIDERED ±2% OF SPECIFIED DIMENSION.
3. OPERATION : MANUALLY BY GEAR WITH HANDWHEEL,CLOCKWISE CLOSING.
4. FLANGE DRILLING STD. AS PER IS: 1538 / ANSI B 16.5 CL- 150 /EN 1092-2 / AS PER CLIENT REQUIREMENTS.
4. TOLERANCE SHALL BE CONFORMING AS PER RELEVANT SPECIFICATION.
5. AS PER RELEVANT SPECIFICATION/ CLIENT REQUIREMENT.
6. MARKING(CAST/PLATE/PUNCHED):-UPADHAYA/SIZE/RATING/HEAT NO.

NOTICE: THIS DRAWING IS THE PROPERTY OF UPADHAYA VALVES MFRS. PVT. LTD. AND MUST NOT BE USED OR COPIED WITHOUT THEIR AUTHORITY IN WRITING.

UPADHAYA VALVES MFRS PVT LTD
23A, NETAJI SUBHAS ROAD, KOLKATA-700001.(INDIA)

	NAME	DATE
DRN	ANAND	01.04.24
CHD.		
APPD.		

SCALE :–N.T.S.

TITLE: D.I. D/F NON-RISING SPINDLE SLUICE VALVE MANUALLY SPUR GEAR OPERATED,AS PER IS:14846/2000,P.N-1.0

DRG.NO:U/GVAL-MG- 00 | SHT 1 OF 1 | REV.-00

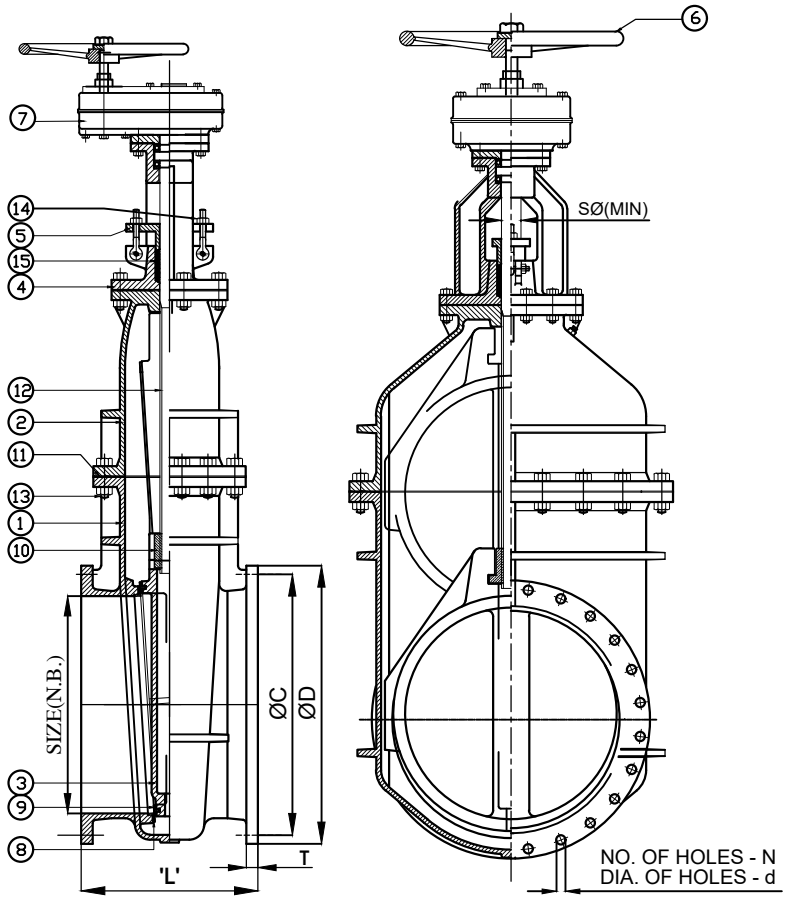

MATERIAL OF CONSTRUCTION

BILL OF MATERIALS

SL.NO.	DESCRIPTION	NO.OFF	MATERIAL & SPECIFICATION
1	BODY	1	C.I. IS:210 GR.FG.200 / 220 / 260
2	BONNET	1	C.I. IS:210 GR.FG.200 / 220 / 260
3	WEDGE	1	C.I. IS:210 GR.FG.200 / 220 / 260
4	STUFFING BOX	1	C.I. IS:210 GR.FG.200 / 220 / 260
5	GLAND	1	C.I. IS:210 GR.FG.200 / 220 / 260
6	HANDWHEEL	1	C.I. IS:210 GR.FG.200 / 220 / 260
7	SPUR GEAR	1	S.G. IRON IS:1865 GR.500/7 / WROUGHT C.S. IS:1570 C55Mn75
8	BODY SEAT RING	2	L.T. BRONZE, IS:318, Gr. LTB - 2
9	WEDGE FACING RING	2	L.T. BRONZE, IS:318, Gr. LTB - 2
10	WEDGE NUT	1	L.T. BRONZE, IS:318, Gr. LTB - 2
11	BONNET GASKET	- -	RUBBER IS:638, TYPE- B
12	STEM	1	S.S. (IS:6603 Gr.12 Cr.12) / S.S. AISI - 410
13	BONNET BOLTS/STUDS,NUTS	AS REQD	CARBON STEEL,IS:1363,CL 4.6/4.0 (IS:1367)
14	GLAND BOLTS/STUDS,NUTS		
15	GLAND PACKING	AS REQD	JUTE & HEMP IS : 5414

TECHNICAL SPECIFICATION

VALVE	SLUICE VALVE	RATING	P.N.- 1.6		
TYPE	NON-RISING SPINDLE	SERVICE	WATER		
MFG. STD.	IS : 14846, PD TYPE.	WORKING PRESSURE	16 KG/Cm^2 MAX		
END. CONNECTION	IS : 1538, TABLE - 4 & 6	WORKING TEMP.	AMBIENT.		
END FACE	FLAT FACE	HYDRO TEST. PRESSURE (Kg/Cm^2)		HYDRO TEST.DURATION	
BASIC MATERIAL	CAST IRON	BODY	24 Kg / Cm^2	BODY	5 MINUTE
TRIM MATERIAL	L.T. BRONZE	SEAT	16 Kg / Cm^2	SEAT	2 MINUTE

NOTES

NOTES:-

1. ALL DIMENSIONS ARE IN MM,UNLESS OTHERWISE SPECIFIED.
2. TOLERANCE WHEREVER NOT SPECIFIED TO BE CONSIDERED ±2% OF SPECIFIED DIMENSION.
3. OPERATION : MANUALLY BY GEAR WITH HANDWHEEL,CLOCKWISE CLOSING.
4. FLANGE DRILLING STD. AS PER IS: 1538 / ANSI B 16.5 CL- 150 /EN 1092-2 / AS PER CLIENT REQUIREMENTS.
4. TOLERANCE SHALL BE CONFORMING AS PER RELEVANT SPECIFICATION.
5. AS PER RELEVANT SPECIFICATION/ CLIENT REQUIREMENT.
6. MARKING(CAST/PLATE/PUNCHED):-UPADHAYA/SIZE/RATING/HEAT NO.

NOTICE: THIS DRAWING IS THE PROPERTY OF UPADHAYA VALVES MFRS. PVT. LTD. AND MUST NOT BE USED OR COPIED WITHOUT THEIR AUTHORITY IN WRITING.

SIZE (N.B.)	FACE TO FACE (L)			STEM DIA.	FLANGE O.D.	P.C.D	FLANGE THICK.	NO.OF. HOLES	DIA.OF. HOLES
MM	" PD "	ALT -I	ALT -II	S	D	C	T	N	d
350	381 ±3	550 ±3	690 ±3	42	505	460	29	16	28
400	406 ±3	600 ±3	750 ±3	47	565	513	30	16	28
450	432 ±3	650 ±3	820 ±3	52	615	565	31.5	20	28
500	457 ±3	700 ±3	880 ±3	52	670	620	33	20	28
600	508 ±3	800 ±3	1000 ±3	57	780	725	36	20	31

UPADHAYA VALVES MFRS PVT LTD
23A, NETAJI SUBHAS ROAD, KOLKATA-700001.(INDIA)

	NAME	DATE
DRN	ANAND	01.04.24
CHD.		
APPD.		

SCALE :–N.T.S.

TITLE: C.I. D/F NON-RISING SPINDLE SLUICE VALVE MANUALLY SPUR GEAR OPERATED,AS PER IS:14846/2000,P.N-1.6

DRG.NO:U/GVAL-MG- 00 | SHT 1 OF 1 | REV.-00

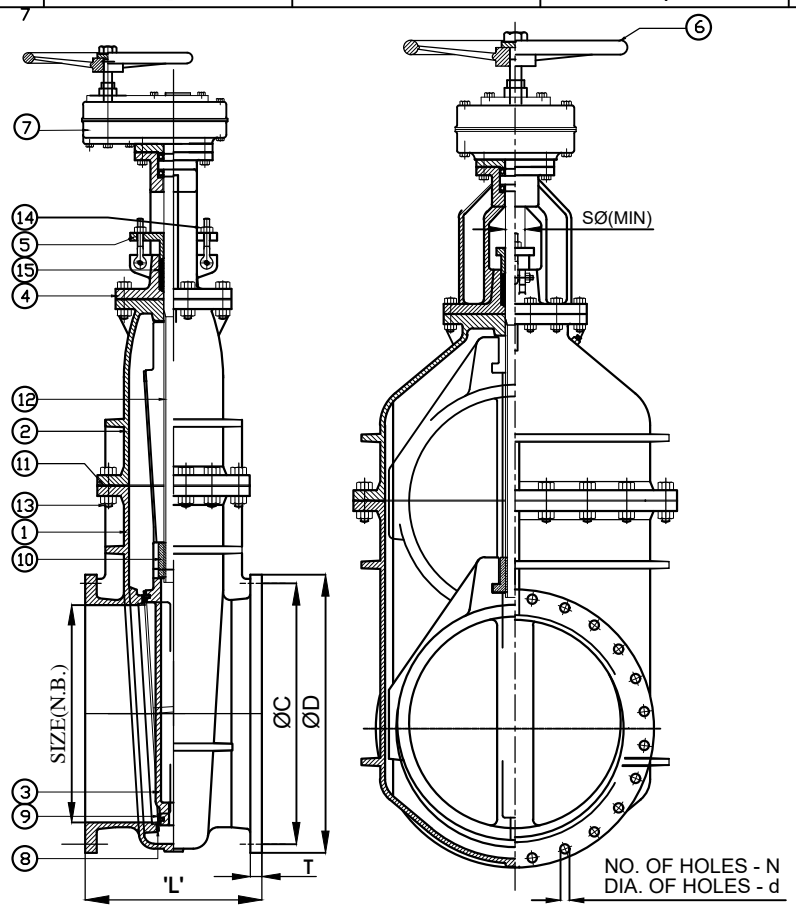

MATERIAL OF CONSTRUCTION

BILL OF MATERIALS

SL.NO.	DESCRIPTION	NO.OFF	MATERIAL & SPECIFICATION
1	BODY	1	D.I IS:1865 GR.500/7
2	BONNET	1	D.I IS:1865 GR.500/7
3	WEDGE	1	D.I IS:1865 GR.500/7
4	STUFFING BOX	1	D.I IS:1865 GR.500/7
5	GLAND	1	D.I IS:1865 GR.500/7
6	HANDWHEEL	1	D.I IS:1865 GR.500/7
7	SPUR GEAR	1	S.G. IRON IS:1865 GR.500/7 / WROUGHT C.S. IS:1570 C55Mn75
8	BODY SEAT RING	2	L.T. BRONZE, IS:318, Gr. LTB - 2
9	WEDGE FACING RING	2	L.T. BRONZE, IS:318, Gr. LTB - 2
10	WEDGE NUT	1	L.T. BRONZE, IS:318, Gr. LTB - 2
11	BONNET GASKET	- -	RUBBER IS:638, TYPE- B
12	STEM	1	S.S. (IS:6603 Gr.12 Cr.12) / S.S. AISI - 410
13	BONNET BOLTS/STUDS,NUTS	AS REQD	CARBON STEEL,IS:1363,CL 4.6/4.0 (IS:1367)
14	GLAND BOLTS/STUDS,NUTS		
15	GLAND PACKING	AS REQD	JUTE & HEMP IS : 5414

TECHNICAL SPECIFICATION

VALVE	SLUICE VALVE	RATING	P.N.- 1.6		
TYPE	NON-RISING SPINDLE	SERVICE	WATER		
MFG. STD.	IS : 14846, PD TYPE.	WORKING PRESSURE	16 KG/Cm^2 MAX		
END. CONNECTION	IS : 1538, TABLE - 4 & 6	WORKING TEMP.	AMBIENT.		
END FACE	FLAT FACE	HYDRO TEST. PRESSURE (Kg/Cm^2)		HYDRO TEST.DURATION	
BASIC MATERIAL	DUCTILE IRON	BODY	24 Kg / Cm^2	BODY	5 MINUTE
TRIM MATERIAL	L.T. BRONZE	SEAT	16 Kg / Cm^2	SEAT	2 MINUTE

NOTES

NOTES:-

1. ALL DIMENSIONS ARE IN MM,UNLESS OTHERWISE SPECIFIED.
2. TOLERANCE WHEREVER NOT SPECIFIED TO BE CONSIDERED ±2% OF SPECIFIED DIMENSION.
3. OPERATION : MANUALLY BY GEAR WITH HANDWHEEL,CLOCKWISE CLOSING.
4. FLANGE DRILLING STD. AS PER IS: 1538 / ANSI B 16.5 CL- 150 /EN 1092-2 / AS PER CLIENT REQUIREMENTS.
4. TOLERANCE SHALL BE CONFORMING AS PER RELEVANT SPECIFICATION.
5. AS PER RELEVANT SPECIFICATION/ CLIENT REQUIREMENT.
6. MARKING(CAST/PLATE/PUNCHED):-UPADHAYA/SIZE/RATING/HEAT NO.

NOTICE: THIS DRAWING IS THE PROPERTY OF UPADHAYA VALVES MFRS. PVT. LTD. AND MUST NOT BE USED OR COPIED WITHOUT THEIR AUTHORITY IN WRITING.

SIZE (N.B.)	FACE TO FACE (L)			STEM DIA.	FLANGE O.D.	P.C.D	FLANGE THICK.	NO.OF. HOLES	DIA.OF. HOLES
MM	" PD "	ALT -I	ALT -II	S	D	C	T	N	d
350	381 ±3	550 ±3	690 ±3	42	505	460	29	16	28
400	406 ±3	600 ±3	750 ±3	47	565	513	30	16	28
450	432 ±3	650 ±3	820 ±3	52	615	565	31.5	20	28
500	457 ±3	700 ±3	880 ±3	52	670	620	33	20	28
600	508 ±3	800 ±3	1000 ±3	57	780	725	36	20	31

UPADHAYA VALVES MFRS PVT LTD
23A, NETAJI SUBHAS ROAD, KOLKATA-700001.(INDIA)

	NAME	DATE
DRN	ANAND	01.04.24
CHD.		
APPD.		

SCALE :–N.T.S.

TITLE: D.I. D/F NON-RISING SPINDLE SLUICE VALVE MANUALLY SPUR GEAR OPERATED,AS PER IS:14846/2000,P.N-1.6

DRG.NO:U/GVAL-MG- 00

SHT 1 OF 1

REV.-00

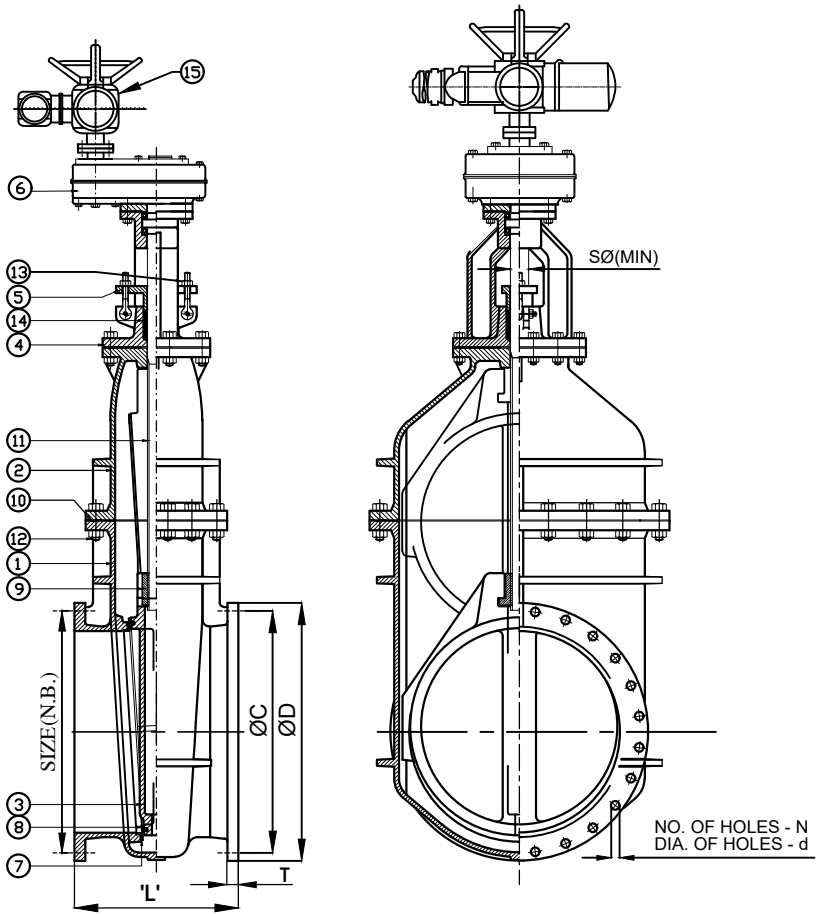

SIZE (N.B.)	FACE TO FACE (L)			STEM DIA.	FLANGE O.D.	P.C.D	FLANGE THICK.	NO.OF. HOLES	DIA.OF. HOLES
MM	" PD "	ALT -I	ALT -II	S	D	C	T	N	d
350	381 ±3	550 ±3	--	37	505	460	29	16	28
400	406 ±3	600 ±3	--	42	565	513	30	16	28
450	432 ±3	650 ±3	--	47	615	565	31.5	20	28
500	457 ±3	700 ±3	--	47	670	620	33	20	28
600	508 ±3	800 ±3	--	47	780	725	36	20	31
700	610 ±4	900 ±4	1130 ±4	62	895	840	38.5	24	31
750	610 ±4	950 ±4	1200 ±4	67	960	900	40	24	31
800	660 ±4	1000 ±4	1250 ±4	67	1015	950	41.5	24	34
900	711 ±5	1100 ±5	1380 ±5	77	1115	1050	44	28	34
1000	811 ±5	1200 ±5	1500 ±2	77	1230	1160	47	28	37
1100	1650 ±6	--	--	87	1340	1270	50	32	37
1200	1800 ±6	--	--	87	1455	1380	53	32	40

MATERIAL OF CONSTRUCTION

BILL OF MATERIALS

SL.NO.	DESCRIPTION	NO.OFF	MATERIAL & SPECIFICATION
1	BODY	1	C.I. IS:210 GR.FG.200 / 220 / 260
2	BONNET	1	C.I. IS:210 GR.FG.200 / 220 / 260
3	WEDGE	1	C.I. IS:210 GR.FG.200 / 220 / 260
4	STUFFING BOX	1	C.I. IS:210 GR.FG.200 / 220 / 260
5	GLAND	1	C.I. IS:210 GR.FG.200 / 220 / 260
6	SPUR GEAR	1	S.G. IRON IS:1865 GR.500/7 / WROUGHT C.S. IS:1570 C55Mn75
7	BODY SEAT RING	2	L.T. BRONZE, IS:318, Gr. LTB - 2
8	WEDGE FACING RING	2	L.T. BRONZE, IS:318, Gr. LTB - 2
9	WEDGE NUT	1	L.T. BRONZE, IS:318, Gr. LTB - 2
10	BONNET GASKET	- -	RUBBER IS:638, TYPE- B
11	STEM	1	S.S. (IS:6603 Gr.12 Cr.12) / S.S. AISI - 410
12	BONNET BOLTS/STUDS,NUTS	AS REQD	CARBON STEEL,IS:1363,CL 4.6/4.0 (IS:1367)
13	GLAND BOLTS/STUDS,NUTS		
14	GLAND PACKING	AS REQD	JUTE & HEMP IS : 5414
15	ACTUATOR	1	AUMA / ROTORK

TECHNICAL SPECIFICATION

VALVE	SLUICE VALVE	RATING	P.N.- 1.0		
TYPE	NON-RISING SPINDLE	SERVICE	WATER		
MFG. STD.	IS : 14846, PD TYPE.	WORKING PRESSURE	10 KG/Cm^2 MAX		
END. CONNECTION	IS : 1538, TABLE - 4 & 6	WORKING TEMP.	AMBIENT.		
END FACE	FLAT FACE	HYDRO TEST. PRESSURE (Kg/Cm^2)		HYDRO TEST.DURATION	
BASIC MATERIAL	CAST IRON	BODY	15 Kg / Cm^2	BODY	5 MINUTE
TRIM MATERIAL	L.T. BRONZE	SEAT	10 Kg / Cm^2	SEAT	2 MINUTE

NOTES

NOTES:-

1. ALL DIMENSIONS ARE IN MM,UNLESS OTHERWISE SPECIFIED.
2. TOLERANCE WHEREVER NOT SPECIFIED TO BE CONSIDERED ±2% OF SPECIFIED DIMENSION.
3. OPERATION : GEAR WITH ACTUATOR OPERATING.
4. FLANGE DRILLING STD. AS PER IS: 1538 / ANSI B 16.5 CL- 150 /EN 1092-2 / AS PER CLIENT REQUIREMENTS.
4. TOLERANCE SHALL BE CONFORMING AS PER RELEVANT SPECIFICATION.
5. AS PER RELEVANT SPECIFICATION/ CLIENT REQUIREMENT.
6. MARKING(CAST/PLATE/PUNCHED):-UPADHAYA/SIZE/RATING/HEAT NO.

NOTICE: THIS DRAWING IS THE PROPERTY OF UPADHAYA VALVES MFRS. PVT. LTD. AND MUST NOT BE USED OR COPIED WITHOUT THEIR AUTHORITY IN WRITING.

UPADHAYA VALVES MFRS PVT LTD
23A, NETAJI SUBHAS ROAD, KOLKATA-700001.(INDIA)

	NAME	DATE
DRN	ANAND	01.04.24
CHD.		
APPD.		

SCALE :–N.T.S.

TITLE: C.I. D/F NON-RISING SPINDLE SLUICE VALVE WITH SPUR GEAR & ACTUATOR OPERATED,AS PER IS:14846/2000,P.N-1.0

DRG.NO:U/GVAL-ACT- 00 | SHT 1 OF 1 | REV.-00

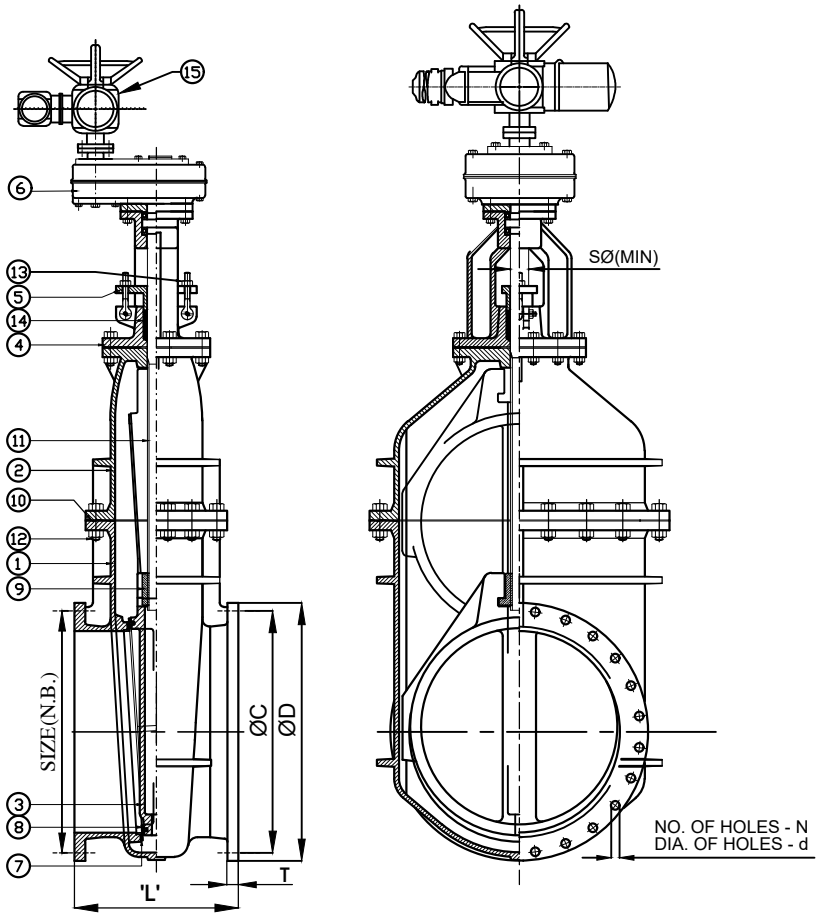

SIZE (N.B.)	FACE TO FACE (L)			STEM DIA.	FLANGE O.D.	P.C.D	FLANGE THICK.	NO.OF. HOLES	DIA.OF. HOLES
MM	" PD "	ALT -I	ALT -II	S	D	C	T	N	d
350	381 ±3	550 ±3	--	37	505	460	29	16	28
400	406 ±3	600 ±3	--	42	565	513	30	16	28
450	432 ±3	650 ±3	--	47	615	565	31.5	20	28
500	457 ±3	700 ±3	--	47	670	620	33	20	28
600	508 ±3	800 ±3	--	47	780	725	36	20	31
700	610 ±4	900 ±4	1130 ±4	62	895	840	38.5	24	31
750	610 ±4	950 ±4	1200 ±4	67	960	900	40	24	31
800	660 ±4	1000 ±4	1250 ±4	67	1015	950	41.5	24	34
900	711 ±5	1100 ±5	1380 ±5	77	1115	1050	44	28	34
1000	811 ±5	1200 ±5	1500 ±2	77	1230	1160	47	28	37
1100	1650 ±6	--	--	87	1340	1270	50	32	37
1200	1800 ±6	--	--	87	1455	1380	53	32	40

MATERIAL OF CONSTRUCTION

BILL OF MATERIALS

SL.NO.	DESCRIPTION	NO.OFF	MATERIAL & SPECIFICATION
1	BODY	1	D.I IS:1865 GR.500/7
2	BONNET	1	D.I IS:1865 GR.500/7
3	WEDGE	1	D.I IS:1865 GR.500/7
4	STUFFING BOX	1	D.I IS:1865 GR.500/7
5	GLAND	1	D.I IS:1865 GR.500/7
6	SPUR GEAR	1	S.G. IRON IS:1865 GR.500/7 / WROUGHT C.S. IS:1570 C55Mn75
7	BODY SEAT RING	2	L.T. BRONZE, IS:318, Gr. LTB - 2
8	WEDGE FACING RING	2	L.T. BRONZE, IS:318, Gr. LTB - 2
9	WEDGE NUT	1	L.T. BRONZE, IS:318, Gr. LTB - 2
10	BONNET GASKET	- -	RUBBER IS:638, TYPE- B
11	STEM	1	S.S. (IS:6603 Gr.12 Cr.12) / S.S. AISI - 410
12	BONNET BOLTS/STUDS,NUTS	AS REQD	CARBON STEEL,IS:1363,CL 4.6/4.0 (IS:1367)
13	GLAND BOLTS/STUDS,NUTS		
14	GLAND PACKING	AS REQD	JUTE & HEMP IS : 5414
15	ACTUATOR	1	AUMA / ROTORK

TECHNICAL SPECIFICATION

VALVE	SLUICE VALVE	RATING	P.N.- 1.0		
TYPE	NON-RISING SPINDLE	SERVICE	WATER		
MFG. STD.	IS : 14846, PD TYPE.	WORKING PRESSURE	10 KG/Cm^2 MAX		
END. CONNECTION	IS : 1538, TABLE - 4 & 6	WORKING TEMP.	AMBIENT.		
END FACE	FLAT FACE	HYDRO TEST. PRESSURE (Kg/Cm^2)		HYDRO TEST.DURATION	
BASIC MATERIAL	DUCTILE IRON	BODY	15 Kg / Cm^2	BODY	5 MINUTE
TRIM MATERIAL	L.T. BRONZE	SEAT	10 Kg / Cm^2	SEAT	2 MINUTE

NOTES

NOTES:-

1. ALL DIMENSIONS ARE IN MM,UNLESS OTHERWISE SPECIFIED.
2. TOLERANCE WHEREVER NOT SPECIFIED TO BE CONSIDERED ±2% OF SPECIFIED DIMENSION.
3. OPERATION : GEAR WITH ACTUATOR OPERATING.
4. FLANGE DRILLING STD. AS PER IS: 1538 / ANSI B 16.5 CL- 150 /EN 1092-2 / AS PER CLIENT REQUIREMENTS.
4. TOLERANCE SHALL BE CONFORMING AS PER RELEVANT SPECIFICATION.
5. AS PER RELEVANT SPECIFICATION/ CLIENT REQUIREMENT.
6. MARKING(CAST/PLATE/PUNCHED):-UPADHAYA/SIZE/RATING/HEAT NO.

NOTICE: THIS DRAWING IS THE PROPERTY OF UPADHAYA VALVES MFRS. PVT. LTD. AND MUST NOT BE USED OR COPIED WITHOUT THEIR AUTHORITY IN WRITING.

UPADHAYA VALVES MFRS PVT LTD
23A, NETAJI SUBHAS ROAD, KOLKATA-700001.(INDIA)

	NAME	DATE
DRN	ANAND	01.04.24
CHD.		
APPD.		

SCALE :–N.T.S.

TITLE: D.I. D/F NON-RISING SPINDLE SLUICE VALVE WITH SPUR GEAR & ACTUATOR OPERATED,AS PER IS:14846/2000,P.N-1.0

DRG.NO:U/GVAL-ACT- 00 | SHT 1 OF 1 | REV.-00

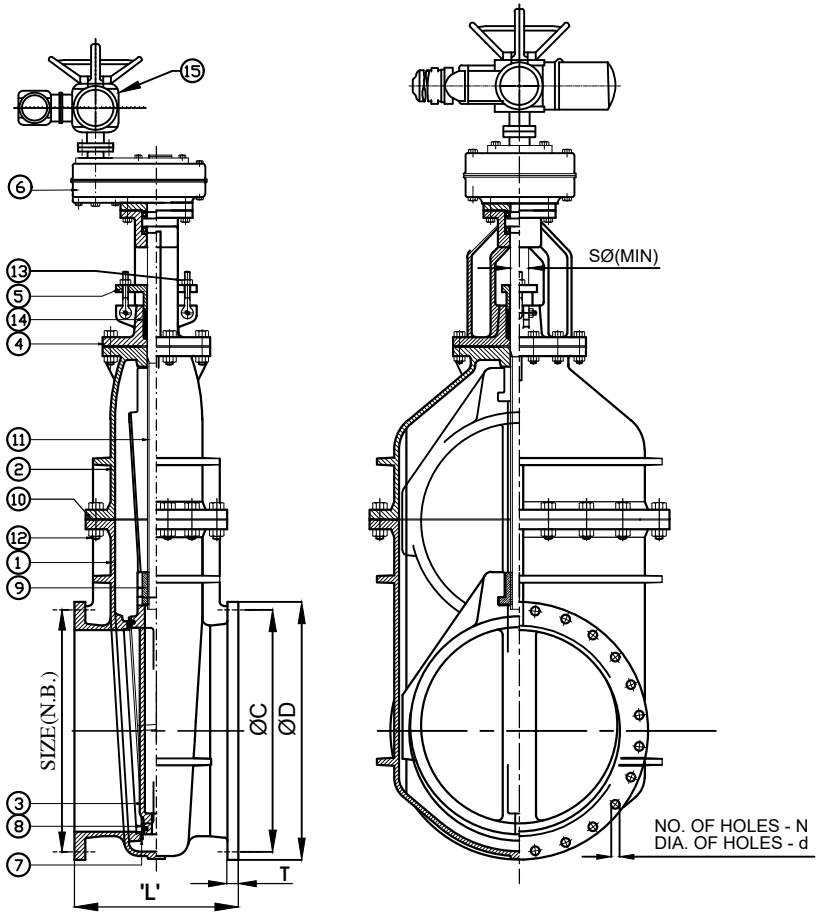

MATERIAL OF CONSTRUCTION

BILL OF MATERIALS

SL.NO.	DESCRIPTION	NO.OFF	MATERIAL & SPECIFICATION
1	BODY	1	C.I. IS:210 GR.FG.200 / 220 / 260
2	BONNET	1	C.I. IS:210 GR.FG.200 / 220 / 260
3	WEDGE	1	C.I. IS:210 GR.FG.200 / 220 / 260
4	STUFFING BOX	1	C.I. IS:210 GR.FG.200 / 220 / 260
5	GLAND	1	C.I. IS:210 GR.FG.200 / 220 / 260
6	SPUR GEAR	1	S.G. IRON IS:1865 GR.500/7 / WROUGHT C.S. IS:1570 C55Mn75
7	BODY SEAT RING	2	L.T. BRONZE, IS:318, Gr. LTB - 2
8	WEDGE FACING RING	2	L.T. BRONZE, IS:318, Gr. LTB - 2
9	WEDGE NUT	1	L.T. BRONZE, IS:318, Gr. LTB - 2
10	BONNET GASKET	- -	RUBBER IS:638, TYPE- B
11	STEM	1	S.S. (IS:6603 Gr.12 Cr.12) / S.S. AISI - 410
12	BONNET BOLTS/STUDS,NUTS	AS REQD	CARBON STEEL,IS:1363,CL 4.6/4.0 (IS:1367)
13	GLAND BOLTS/STUDS,NUTS		
14	GLAND PACKING	AS REQD	JUTE & HEMP IS : 5414
15	ACTUATOR	1	AUMA / ROTORK

TECHNICAL SPECIFICATION

VALVE	SLUICE VALVE	RATING	P.N.- 1.6		
TYPE	NON-RISING SPINDLE	SERVICE	WATER		
MFG. STD.	IS : 14846, PD TYPE.	WORKING PRESSURE	16 KG/Cm^2 MAX		
END. CONNECTION	IS : 1538, TABLE - 4 & 6	WORKING TEMP.	AMBIENT.		
END FACE	FLAT FACE	HYDRO TEST. PRESSURE (Kg/Cm^2)		HYDRO TEST.DURATION	
BASIC MATERIAL	CAST IRON	BODY	24 Kg / Cm^2	BODY	5 MINUTE
TRIM MATERIAL	L.T. BRONZE	SEAT	16 Kg / Cm^2	SEAT	2 MINUTE

NOTES

NOTES:-

1. ALL DIMENSIONS ARE IN MM,UNLESS OTHERWISE SPECIFIED.
2. TOLERANCE WHEREVER NOT SPECIFIED TO BE CONSIDERED ±2% OF SPECIFIED DIMENSION.
3. OPERATION : GEAR WITH ACTUATOR OPERATING.
4. FLANGE DRILLING STD. AS PER IS: 1538 / ANSI B 16.5 CL- 150 /EN 1092-2 / AS PER CLIENT REQUIREMENTS.
4. TOLERANCE SHALL BE CONFORMING AS PER RELEVANT SPECIFICATION.
5. AS PER RELEVANT SPECIFICATION/ CLIENT REQUIREMENT.
6. MARKING(CAST/PLATE/PUNCHED):-UPADHAYA/SIZE/RATING/HEAT NO.

NOTICE THIS DRAWING IS THE PROPERTY OF UPADHAYA VALVES MFRS. PVT. LTD. AND MUST NOT BE USED OR COPIED WITHOUT THEIR AUTHORITY IN WRITING.

SIZE (N.B.)	FACE TO FACE (L)			STEM DIA.	FLANGE O.D.	P.C.D	FLANGE THICK.	NO.OF. HOLES	DIA.OF. HOLES
MM	" PD "	ALT -I	ALT -II	S	D	C	T	N	d
350	381 ±3	550 ±3	690 ±3	42	505	460	29	16	28
400	406 ±3	600 ±3	750 ±3	47	565	513	30	16	28
450	432 ±3	650 ±3	820 ±3	52	615	565	31.5	20	28
500	457 ±3	700 ±3	880 ±3	52	670	620	33	20	28
600	508 ±3	800 ±3	1000 ±3	57	780	725	36	20	31

UPADHAYA VALVES MFRS PVT LTD
23A, NETAJI SUBHAS ROAD, KOLKATA-700001.(INDIA)

	NAME	DATE
DRN	ANAND	01.04.24
CHD.		
APPD.		

SCALE :–N.T.S.

TITLE: C.I. D/F NON-RISING SPINDLE SLUICE VALVE WITH SPUR GEAR & ACTUATOR OPERATED,AS PER IS:14846/2000,P.N-1.6

DRG.NO:U/GVAL-ACT- 00 | SHT 1 OF 1 | REV.-00

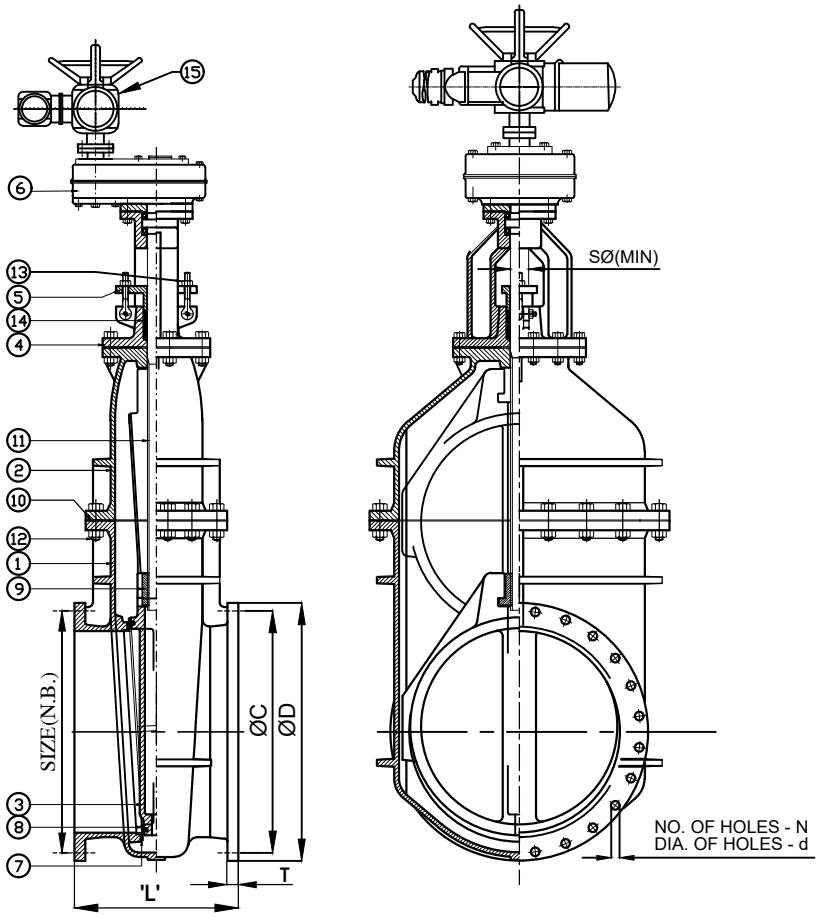

MATERIAL OF CONSTRUCTION

BILL OF MATERIALS

SL.NO.	DESCRIPTION	NO.OFF	MATERIAL & SPECIFICATION
1	BODY	1	D.I IS:1865 GR.500/7
2	BONNET	1	D.I IS:1865 GR.500/7
3	WEDGE	1	D.I IS:1865 GR.500/7
4	STUFFING BOX	1	D.I IS:1865 GR.500/7
5	GLAND	1	D.I IS:1865 GR.500/7
6	SPUR GEAR	1	S.G. IRON IS:1865 GR.500/7 / WROUGHT C.S. IS:1570 C55Mn75
7	BODY SEAT RING	2	L.T. BRONZE, IS:318, Gr. LTB - 2
8	WEDGE FACING RING	2	L.T. BRONZE, IS:318, Gr. LTB - 2
9	WEDGE NUT	1	L.T. BRONZE, IS:318, Gr. LTB - 2
10	BONNET GASKET	- -	RUBBER IS:638, TYPE- B
11	STEM	1	S.S. (IS:6603 Gr.12 Cr.12) / S.S. AISI - 410
12	BONNET BOLTS/STUDS,NUTS	AS REQD	CARBON STEEL,IS:1363,CL 4.6/4.0 (IS:1367)
13	GLAND BOLTS/STUDS,NUTS		
14	GLAND PACKING	AS REQD	JUTE & HEMP IS : 5414
15	ACTUATOR	1	AUMA / ROTORK

TECHNICAL SPECIFICATION

VALVE	SLUICE VALVE	RATING	P.N.- 1.6		
TYPE	NON-RISING SPINDLE	SERVICE	WATER		
MFG. STD.	IS : 14846, PD TYPE.	WORKING PRESSURE	16 KG/Cm^2 MAX		
END. CONNECTION	IS : 1538, TABLE - 4 & 6	WORKING TEMP.	AMBIENT.		
END FACE	FLAT FACE	HYDRO TEST. PRESSURE (Kg/Cm^2)		HYDRO TEST.DURATION	
BASIC MATERIAL	DUCTILE IRON	BODY	24 Kg / Cm^2	BODY	5 MINUTE
TRIM MATERIAL	L.T. BRONZE	SEAT	16 Kg / Cm^2	SEAT	2 MINUTE

NOTES

NOTES:-

1. ALL DIMENSIONS ARE IN MM,UNLESS OTHERWISE SPECIFIED.
2. TOLERANCE WHEREVER NOT SPECIFIED TO BE CONSIDERED ±2% OF SPECIFIED DIMENSION.
3. OPERATION : GEAR WITH ACTUATOR OPERATING.
4. FLANGE DRILLING STD. AS PER IS: 1538 / ANSI B 16.5 CL- 150 /EN 1092-2 / AS PER CLIENT REQUIREMENTS.
4. TOLERANCE SHALL BE CONFORMING AS PER RELEVANT SPECIFICATION.
5. AS PER RELEVANT SPECIFICATION/ CLIENT REQUIREMENT.
6. MARKING(CAST/PLATE/PUNCHED):-UPADHAYA/SIZE/RATING/HEAT NO.

NOTICE THIS DRAWING IS THE PROPERTY OF UPADHAYA VALVES MFRS. PVT. LTD. AND MUST NOT BE USED OR COPIED WITHOUT THEIR AUTHORITY IN WRITING.

SIZE (N.B.)	FACE TO FACE (L)			STEM DIA.	FLANGE O.D.	P.C.D	FLANGE THICK.	NO.OF. HOLES	DIA.OF. HOLES
MM	" PD "	ALT -I	ALT -II	S	D	C	T	N	d
350	381 ±3	550 ±3	690 ±3	42	505	460	29	16	28
400	406 ±3	600 ±3	750 ±3	47	565	513	30	16	28
450	432 ±3	650 ±3	820 ±3	52	615	565	31.5	20	28
500	457 ±3	700 ±3	880 ±3	52	670	620	33	20	28
600	508 ±3	800 ±3	1000 ±3	57	780	725	36	20	31

UPADHAYA VALVES MFRS PVT LTD
23A, NETAJI SUBHAS ROAD, KOLKATA-700001.(INDIA)

	NAME	DATE
DRN	ANAND	01.04.24
CHD.		
APPD.		

SCALE :–N.T.S.

TITLE: D.I. D/F NON-RISING SPINDLE SLUICE VALVE WITH SPUR GEAR & ACTUATOR OPERATED,AS PER IS:14846/2000,P.N-1.6

DRG.NO:U/GVAL-ACT- 00 | SHT 1 OF 1 | REV.-00